Electrolux PROFESSIONAL

High Productivity Cooking Variomix 80l with feet including Lid, Food sensor, Automatic water filling and Level control

ITEM #

MODEL #

NAME #

SIS #

AIA #

232306 (SM6V80F) Variomix 80 l, with feet including lid, food sensor, automatic water filling and level control. H=600

Short Form Specification

Item No.

AISI 304 stainless steel construction with AISI 316 stainless steel deep drawn pan with rounded edges; motorised tilting; vessel can be tilted beyond 90° to completely empty the food. Ergonomic and user friendly thanks to the high tilting position. Heavy duty, balanced stainless steel lid with sliding plastic cover to insert ingredients. Food is uniformly heated through the base and side walls of the pan by an indirect heating system. Food sensor, placed on the bottom of the vessel, provides efficient temperature control even with small amounts of food. Automatic water filling makes possible to preset the desired quantity of water and the curved pan base guarantees that the appliance is also suitable to prepare small quantities of food. Electronic control with possibility to store up to 50 programs, large display for easy use and a complete control over the functions. Speeds from 20 to 100 rpm, with special program "Whipping" cycle up to 200 rpm.
The electronic control can be programmed for different types of stirring: continuous operation, reverse operation with intervals etc.
Safety thermostat protects against low water level. Safety valve avoids overpressure of the steam in the jacket. 600mm tilting height.
Including automatic water filling, food sensor and level control.
Equipped with feet for better hygiene, flexibility and versatility.

APPROVAL:

Main Features

- 600 mm tilting height minimum.
- Equipped with feet for better hygiene, flexibility and versatility.
- Automatic water filling makes possible to preset the desired quantity of water.
- Food sensor, placed on the bottom of the vessel, provides efficient temperature control even with small amounts of food. Can be connected to HACCP integrated system.
- Food is uniformly heated through the base and side walls of the pan by an indirect heating system which uses integrally generated saturated steam at a temperature of 120°C in a jacket with an automatic deaeration system.
- Fast working thanks to the high efficient heating technology and well insulation that keeps the heat inside the well.
- Electronic control with possibility to store up to 50 programs, large display for easy use and a complete control over the following functions: start, cooking time, temperature, water filling and mixing speed.
- Curved pan base guarantees that the appliance ia also suitable to prepare small quantities of food.
- Constructed to meet the highest hygiene standards.
- Compliant to CE requirements for safety.
- Safe thanks to the higher water protection IPX5 and the lower temperature outside the panels.
- Isolated upper well rim avoids risk of harm for the user.
- High thermal input and fast heat up.
- Level control: maximizes heating elements lifetime, avoids jacket water manual filling.
- Safety thermostat protects against low water level.
- Safety valve avoids overpressure of the steam in the jacket.
- ACCESSORIES:
  - Whipping tool - quickly whips foods such as cream, egg whites, etc
  - Cleaning tool - may be fitted on the rotating shaft to facilitate cleaning of the cooking surface and safety grid After use, it may be placed directly in the dishwasher and the brushes may be replaced.
- OPTIONS (to be ordered with the machine and must be installed in the factory):
  - Automatic cooling - allows cooling down of the food connecting the jacket to the tap network
  - Spray gun - integrated spray unit

Construction

- Ergonomic and user friendly thanks to the high tilting position and the pouring lip design which allow to easily fill containers.
- Heavy duty, balanced stainless steel lid with sliding plastic cover to insert ingredients. Easy to remove and turn to facilitate cleaning.
- Tilting axis located at the front and upper position of the pan to keep the pouring path short when filling different types of vessels.
- Vessel can be tilted beyond 90° to completely empty the food.
- Motorised tilting.
- Max pressure 1,5 bar.
- AISI 304 stainless steel construction with AISI 316 stainless steel deep drawn pan with rounded edges.
- Variable speed agitator moves at up to 200 rpm.

Sustainability

- High-quality thermal insulation of the pan saves energy and keeps operating ambient temperature low.

Optional Accessories

• Strainer 80l and 100l	PNC 928025	❑
• Trolley to store tools for 5 boiling pans	PNC 928043	❑
• Trolley to store tools for 2 boiling pans	PNC 928044	❑
• Short brush for connection to boiling pan spray unit	PNC 928082	❑
• Long brush for connection to boiling pan spray unit	PNC 928083	❑
• Cleaning tool Variomix 80lt	PNC 928165	❑
• Set of scrapers for gate agitator - EBV80	PNC 928166	❑
• Left column for 600mm tilting height models for frame with feet	PNC 928169	❑
• Frame with feet for 80-100l SMART boiling pan, models with feet only	PNC 928179	❑
• Fixing kit for installation on slope or slippery floors for models with feet only	PNC 928186	❑

The company reserves the right to make modifications to the products without prior notice. All information correct at time of printing.

High Productivity Cooking
Variomix 80l with feet including Lid, Food sensor, Automatic water filling and Level control

Front

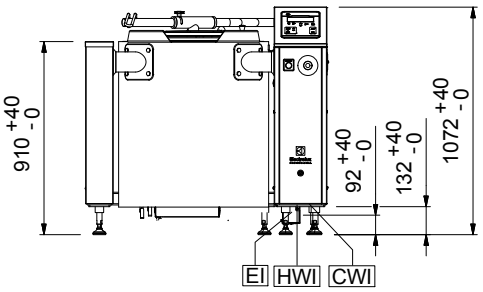

Side

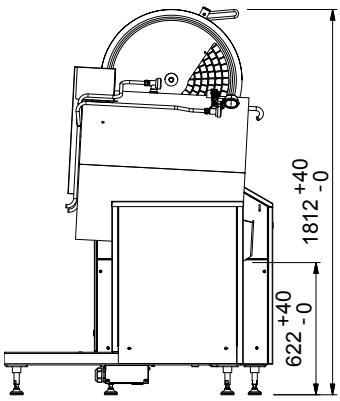

CWI1 = Cold Water inlet 1 (cleaning)
EI = Electrical inlet (power)
HWI = Hot water inlet

Top

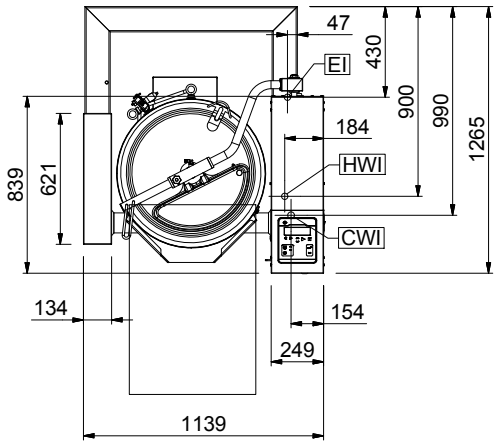

Electric

Supply voltage:	
232306 (SM6V80F)	400 V/3N ph/50 Hz
Electrical power max.:	23.3 kW

Installation:

Distance back floor tilted:	620 mm

Key Information:

Working Temperature MIN:	30 °C
Working Temperature MAX:	121 °C
Vessel (round) diameter:	580 mm
Vessel (round) depth:	464 mm
External dimensions, Width:	1140 mm
External dimensions, Depth:	925 mm
External dimensions, Height:	1050 mm
Net vessel useful capacity:	80 lt
Tilting mechanism:	Automatic
Bearing:	Front

The company reserves the right to make modifications to the products without prior notice. All information correct at time of printing.

2024.10.08